Connector Type —— F Type Compression Connector
Frequency Range —— 0.3-3000MHZ
Cable Type —— RG11
Impedance(Nominal.)—— 75Ω
Shielding Effectiveness —— Better than -90dB

Mechanic Requirements

Corrosion Resistance: 1000hours

Cable Assembly Force: < 20lbs

Tensile Strength: >50lbs(22.68kg),ambient temp

Breaking Torque: > 30 in-lbs

Operating Temperature: -40℃—60℃

Return Loss	0.3 – 500 MHz: - 42.2dB
	500 — 860 MHz : - 40.1dB
	860 – 1000 MHz: - 37.8dB
	1000 — 3000 MHz : >- 30dB

Insertion Loss

0.3 – 500 MHz: - 0.1dB

500– 3000 MHz: < - 0.3 dB

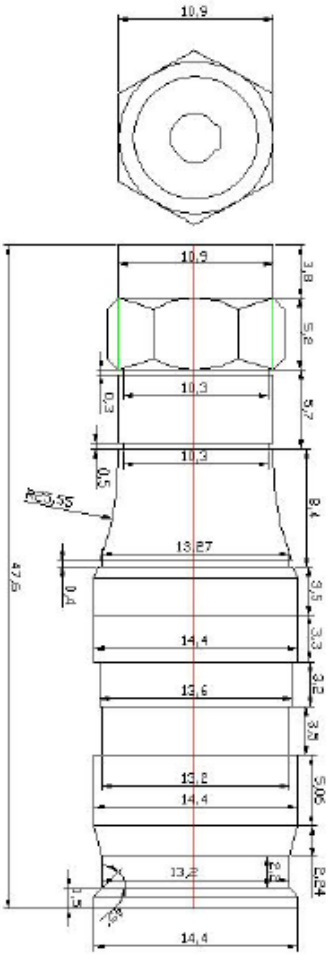

Structure Chart

Materials

Housing Material: Brass

Copper Content(min): 58%

Plating Material: Nikel

Plating Thickness: 1.5μ